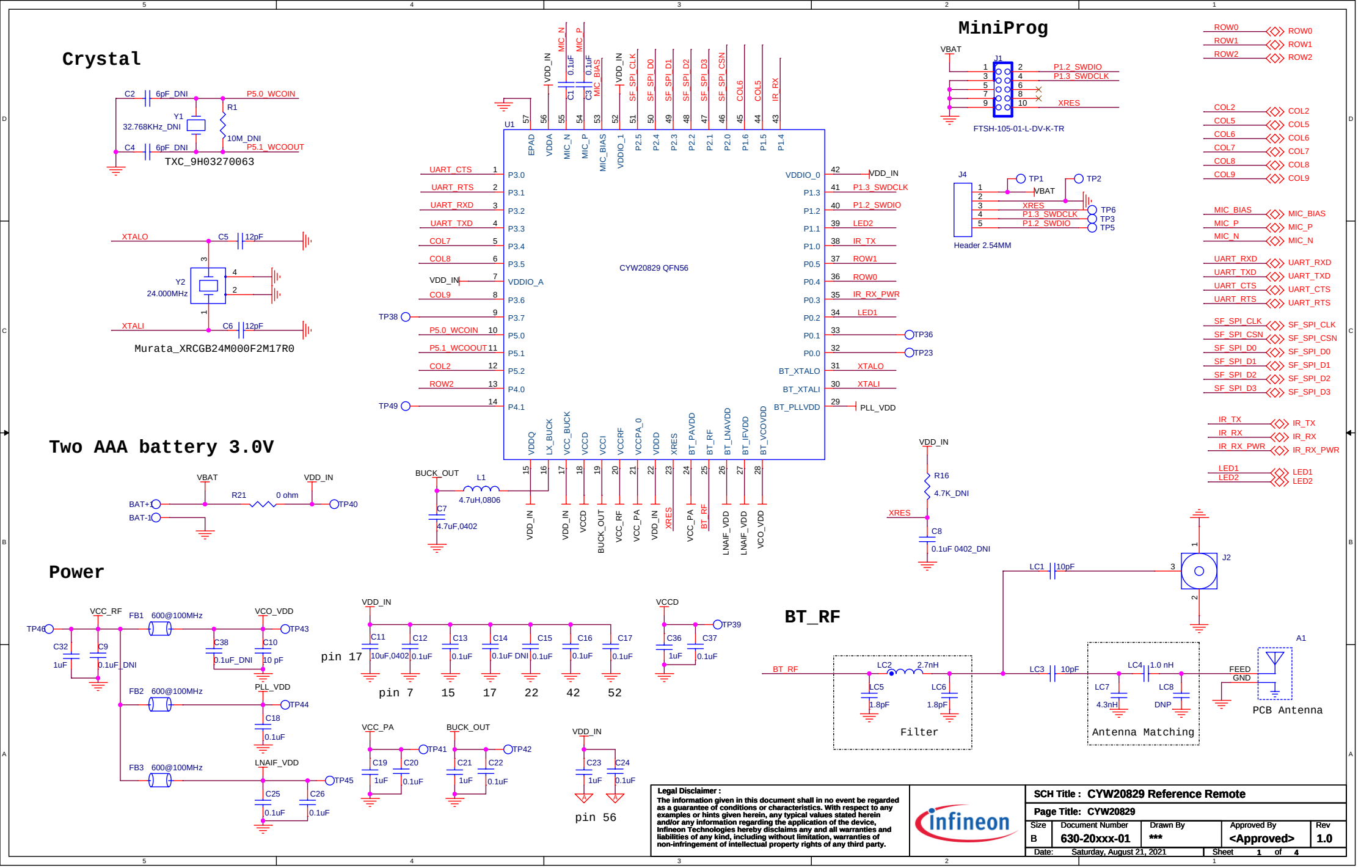

Legal Disclaimer :
The information given in this document shall in no event be regarded as a guarantee of conditions or characteristics. With respect to any examples or hints given herein, any typical values stated herein and/or any information regarding the application of the device, Infineon Technologies hereby disclaims any and all warranties and liabilities of any kind, including without limitation, warranties of non-infringement of intellectual property rights of any third party.

SCH Title : CYW20829 Reference Remote				
Page Title: CYW20829				
Size	Document Number	Drawn By	Approved By	Rev
B	630-20xxx-01	***	<Approved>	1.0
Date: Saturday, August 21, 2021			Sheet 1 of 4	

Analog MIC

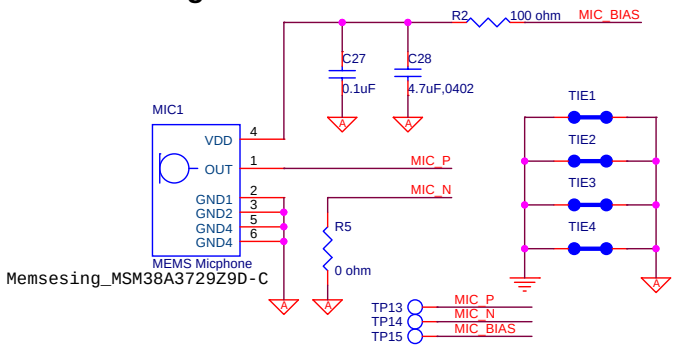

LED

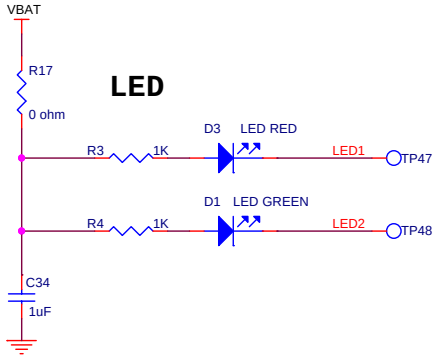

MIC_BIAS ↔ MIC_BIAS
MIC_P ↔ MIC_P
MIC_N ↔ MIC_N

UART_RXD ↔ UART_RXD
UART_TXD ↔ UART_TXD
UART_CTS ↔ UART_CTS
UART_RTS ↔ UART_RTS

SF_SPI_CLK ↔ SF_SPI_CLK
SF_SPI_CSN ↔ SF_SPI_CSN
SF_SPI_D0 ↔ SF_SPI_D0
SF_SPI_D1 ↔ SF_SPI_D1
SF_SPI_D2 ↔ SF_SPI_D2
SF_SPI_D3 ↔ SF_SPI_D3

IR_TX ↔ IR_TX
IR_RX ↔ IR_RX
IR_RX_PWR ↔ IR_RX_PWR

LED1 ↔ LED1
LED2 ↔ LED2

Quad SPI Flash

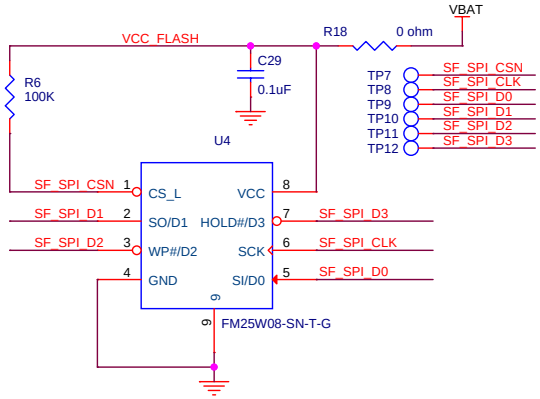

IR TX & Learning

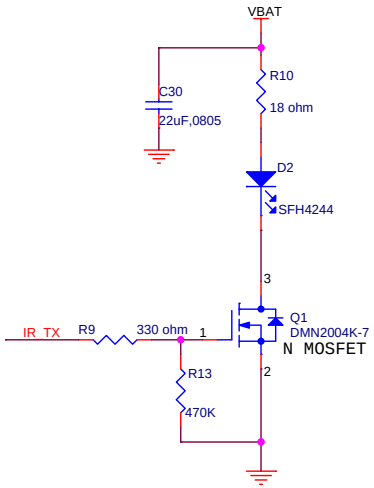

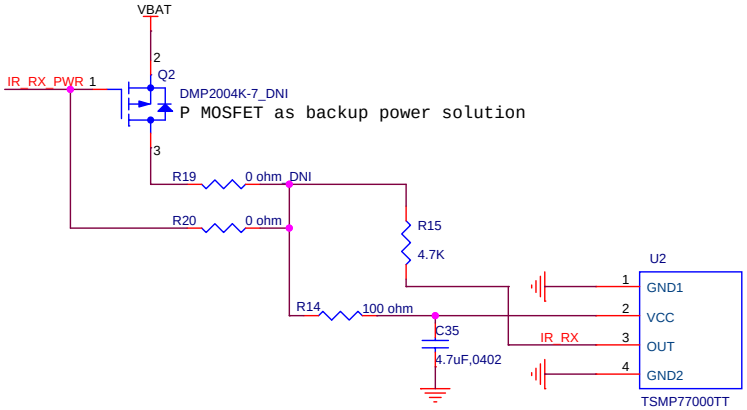

Default configuration: Set IR_RX_PER high, then U2 will work

TP33 ↔ IR_TX
TP34 ↔ IR_RX
TP37 ↔ IR_RX_PWR

UART for Debug

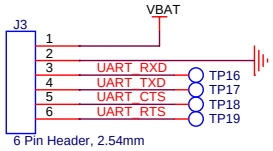

Legal Disclaimer :
The information given in this document shall in no event be regarded as a guarantee of conditions or characteristics. With respect to any examples or hints given herein, any typical values stated herein and/or any information regarding the application of the device, Infineon Technologies hereby disclaims any and all warranties and liabilities of any kind, including without limitation, warranties of non-infringement of intellectual property rights of any third party.

SCH Title : CYW20829 Reference Remote				
Page Title: Peripherals				
Size	Document Number	Drawn By	Approved By	Rev
B	630-20xxx-01	***	<Approved>	1.0
Date: Saturday, August 21, 2021			Sheet 2 of 4	

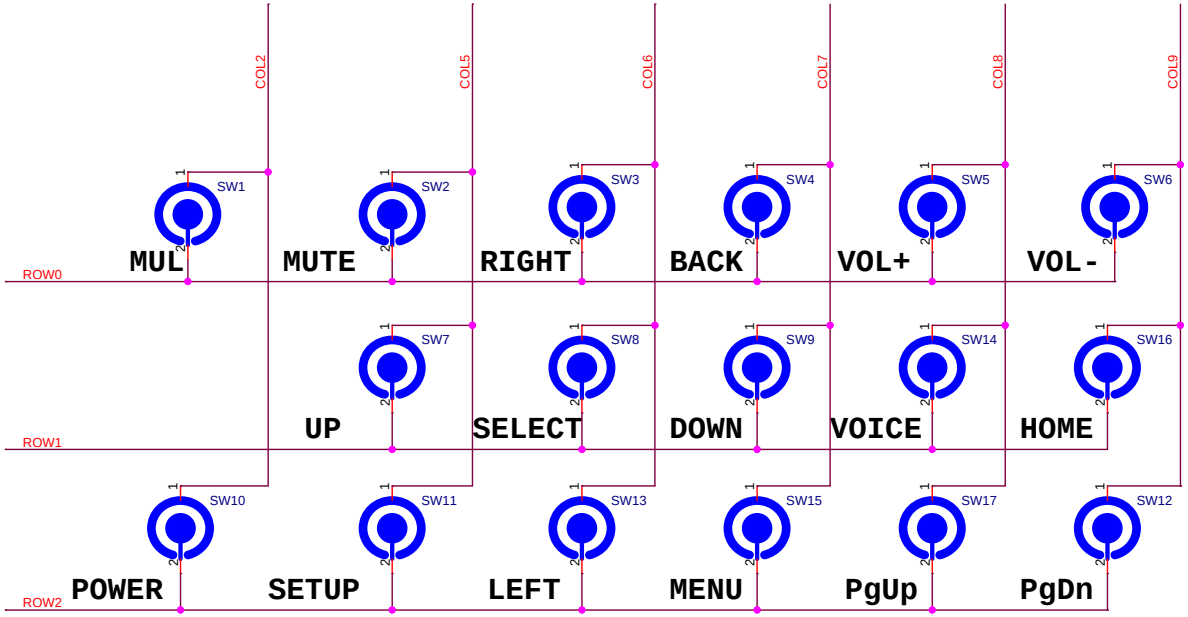

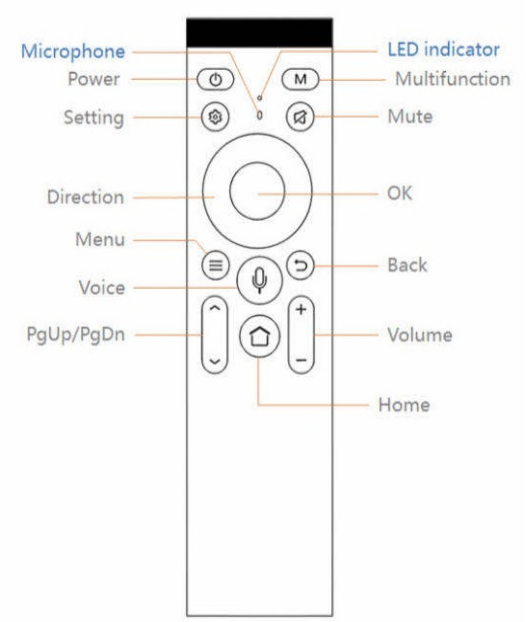

Legal Disclaimer :
The information given in this document shall in no event be regarded as a guarantee of conditions or characteristics. With respect to any examples or hints given herein, any typical values stated herein and/or any information regarding the application of the device, Infineon Technologies hereby disclaims any and all warranties and liabilities of any kind, including without limitation, warranties of non-infringement of intellectual property rights of any third party.

SCH Title : CYW20829 Reference Remote

Page Title: Key Matrix

Size	Document Number	Drawn By	Approved By	Rev
B	630-20xxx-01	***	<Approved>	1.0

Date: Saturday, August 21, 2021 Sheet 3 of 4

REVISION HISTORY

REV	DESCRIPTION OF CHANGE	DATE
0.01	Initial Draft	NOV 22, 2020
0.02	change IR and LED	JAN 14, 2021
0.03	change U2 power	FEB 8, 2021
0.04	Add 4.7K pull up for XRES and DNI; Add 0 ohm for Flash and LED power; Add Q2	APR 3, 2021
0.05	Use 8M bit flash FM25W08-SN-T-G; Seprate VCCI VCCD; PLL_VDD, LNAIF_VDD	JUN 29, 2021
0.06	IO re-assignment	JUL 1, 2021
0.07	Seperate 20829 power from prepherals power; add test points for power	JUL 9, 2021
0.08	Change L1 to 4.7uH; change R10 to 18 ohm	AUG 1, 2021
0.09	change LED	AUG 17, 2021
0.10		
1.0		

Legal Disclaimer :
The information given in this document shall in no event be regarded as a guarantee of conditions or characteristics. With respect to any examples or hints given herein, any typical values stated herein and/or any information regarding the application of the device, Infineon Technologies hereby disclaims any and all warranties and liabilities of any kind, including without limitation, warranties of non-infringement of intellectual property rights of any third party.

SCH Title : CYW20829 Reference Remote

Page Title: Revision History

Size	Document Number	Drawn By	Approved By	Rev
A4	630-20xxx-01	***	<Approved>	1.0

Date: Saturday, August 21, 2021 Sheet 4 of 4